YJ−109

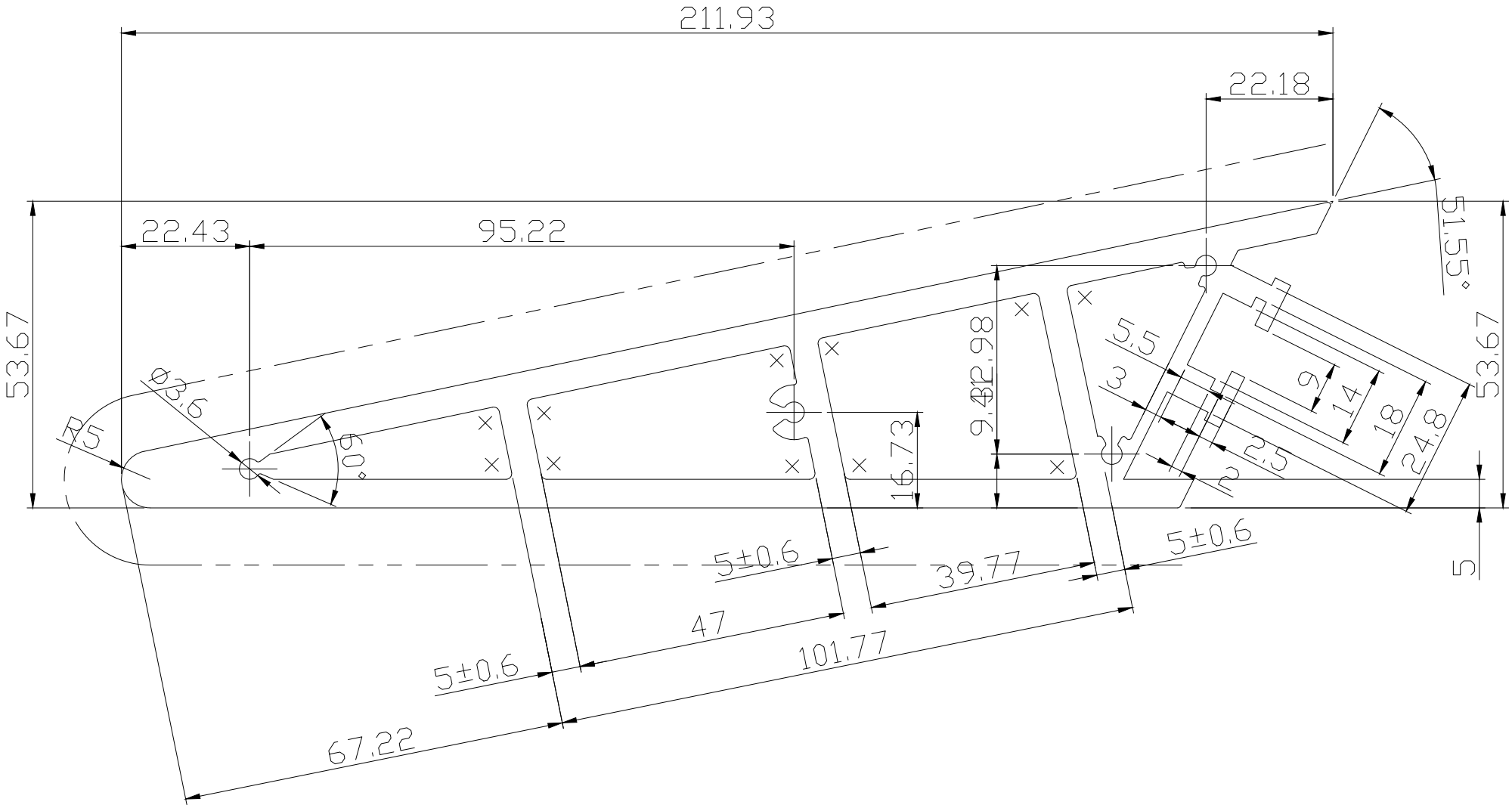
211.93
22.18
51.55°
22.43
95.22
53.67
53.67
Ø3.6
R5
60°
16.73
9.4
12.98
5.5
3
2
2.5
9
14
18
24.8
5±0.6
39.77
5±0.6
47
101.77
5±0.6
67.22
5