YJ-067

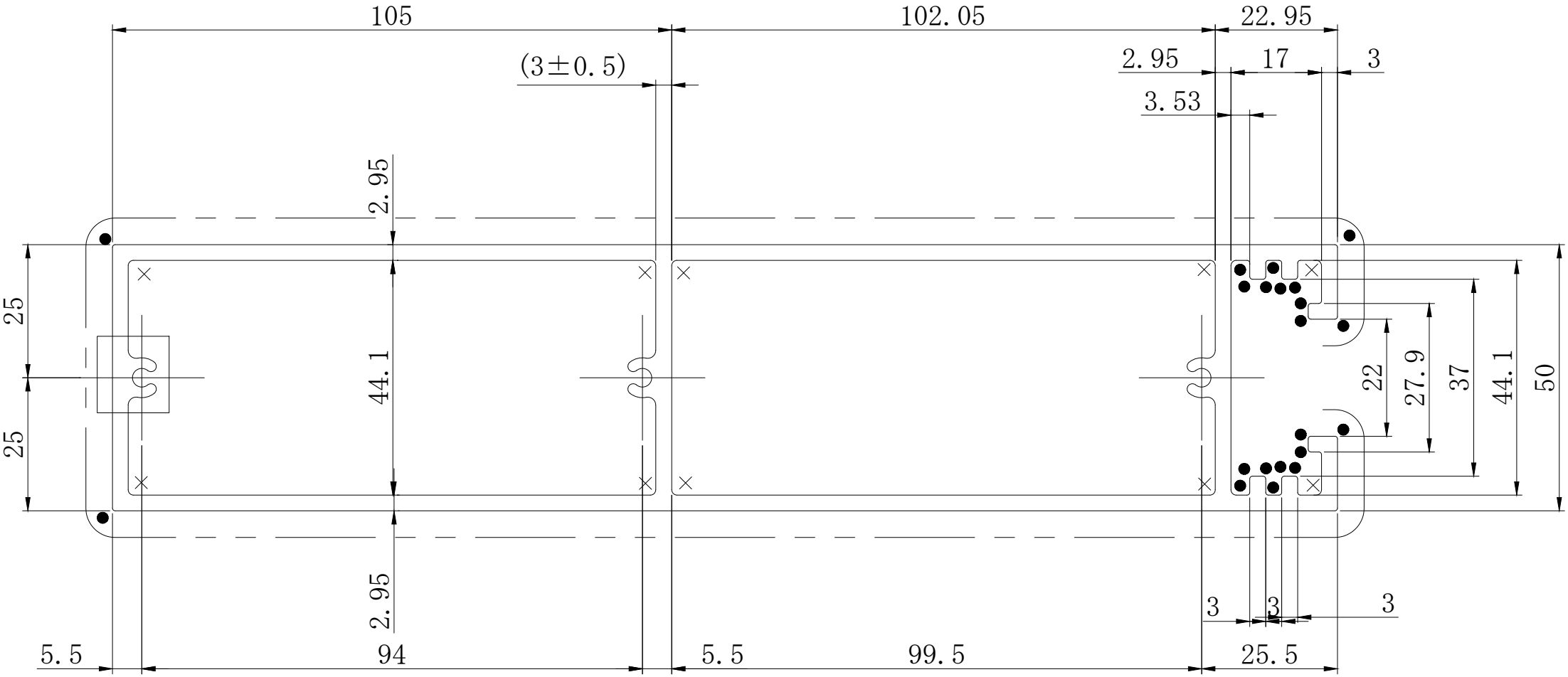
105
102.05
22.95
(3±0.5)
2.95
17
3
3.53
2.95
25
44.1
25
2.95
22
27.9
37
44.1
50
3
3
3
5.5
94
5.5
99.5
25.5