YJ-065

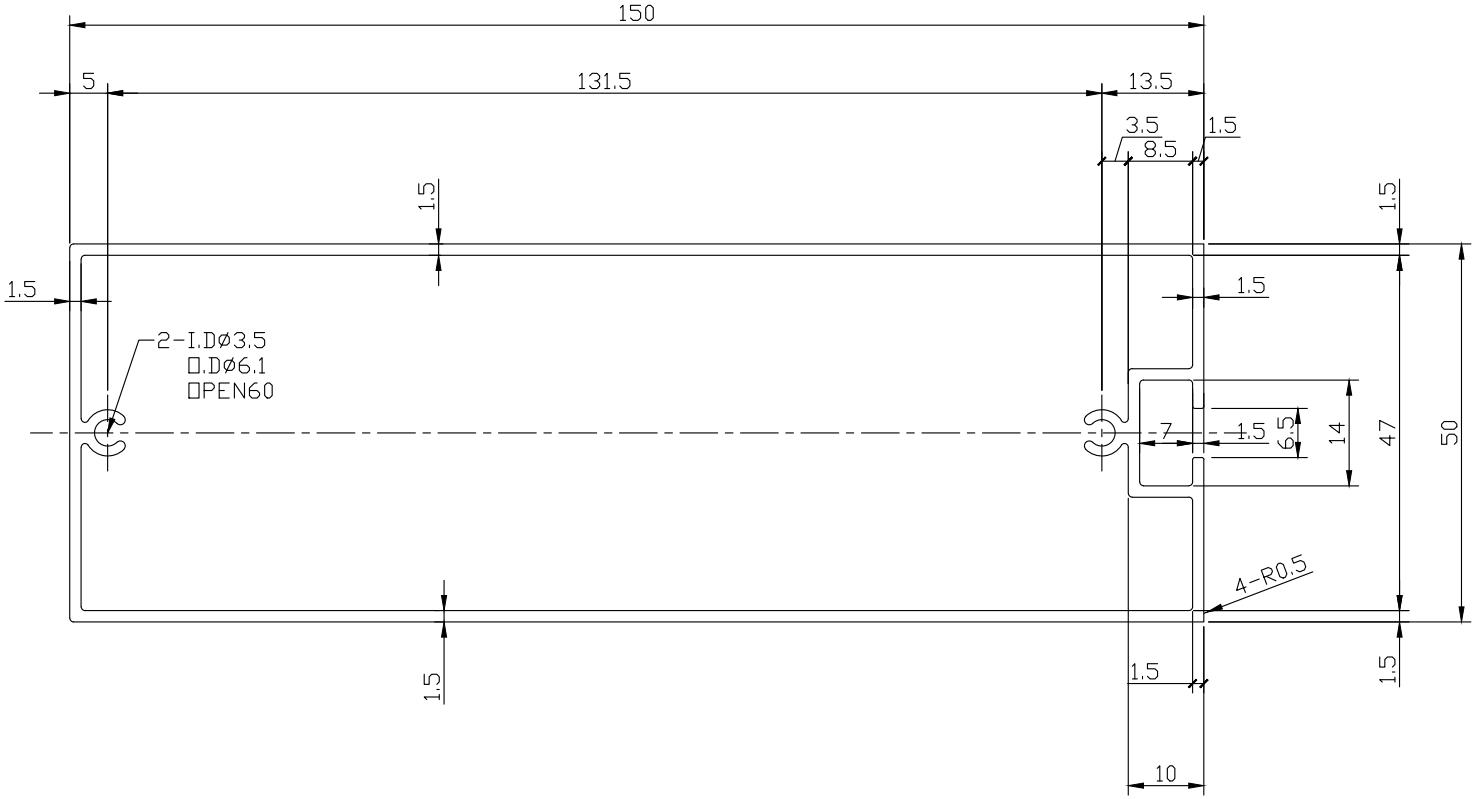
150
5
131.5
13.5
3.5
8.5
1.5
1.5
1.5
1.5
1.5
2-I.DØ3.5
□.DØ6.1
□PEN60
7
1.5
6.5
14
47
50
4-R0.5
1.5
1.5
1.5
10